ADC104S101 4 Channel, 500 ksps to 1 Msps, 10-Bit A/D Converter

Check for Samples: ADC104S101

FEATURES

- **Specified Over a Range of Sample Rates**
- **Four Input Channels**
- **Variable Power Management**
- **Single Power Supply with 2.7V - 5.25V Range**

KEY SPECIFICATIONS

- **DNL: +0.26/−0.16 LSB (Typ)**
- **INL: +0.4/−0.1 LSB (Typ)**
- **SNR: 61.7 dB (Typ)**
- **Power Consumption:**
  - **3V Supply: 3.9 mW (Typ)**
  - **5V Supply: 11.4 mW (Typ)**

APPLICATIONS

- **Portable Systems**
- **Remote Data Acquisition**
- **Instrumentation and Control Systems**

DESCRIPTION

The ADC104S101 is a low-power, four-channel CMOS 10-bit analog-to-digital converter with a high-speed serial interface. Unlike the conventional practice of specifying performance at a single sample rate only, the ADC104S101 is fully specified over a sample rate range of 500 ksps to 1 Msps. The converter is based on a successive-approximation register architecture with an internal track-and-hold circuit. It can be configured to accept up to four input signals at inputs IN1 through IN4.

The output serial data is straight binary, and is compatible with several standards, such as SPI™, QSPI™, MICROWIRE, and many common DSP serial interfaces.

The ADC104S101 operates with a single supply, that can range from +2.7V to +5.25V. Normal power consumption using a +3V or +5V supply is 3.9 mW and 11.4 mW, respectively. The power-down feature reduces the power consumption to just 0.12 µW using a +3.6V supply, or 0.47 µW using a +5.5V supply.

The ADC104S101 is packaged in a 10-lead VSSOP package. Operation over the industrial temperature range of −40°C to +85°C.

Table 1. Pin-Compatible Alternatives by Resolution and Speed(1)

Resolution	Specified for Sample Rates of:		
	50 to 200 ksps	**200 to 500 ksps**	**500 ksps to 1 Msps**
12-bit	ADC124S021	ADC124S051	ADC124S101
10-bit	ADC104S021	ADC104S051	**ADC104S101**
8-bit	ADC084S021	ADC084S051	ADC084S101

(1) All devices are fully pin and function compatible.

Connection Diagram

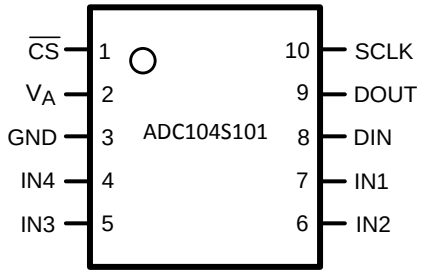

Figure 1. VSSOP Package
See Package Number DGS0010A

Please be aware that an important notice concerning availability, standard warranty, and use in critical applications of Texas Instruments semiconductor products and disclaimers thereto appears at the end of this data sheet.

All trademarks are the property of their respective owners.

PRODUCTION DATA information is current as of publication date. Products conform to specifications per the terms of the Texas Instruments standard warranty. Production processing does not necessarily include testing of all parameters.

Copyright © 2005–2013, Texas Instruments Incorporated

Block Diagram

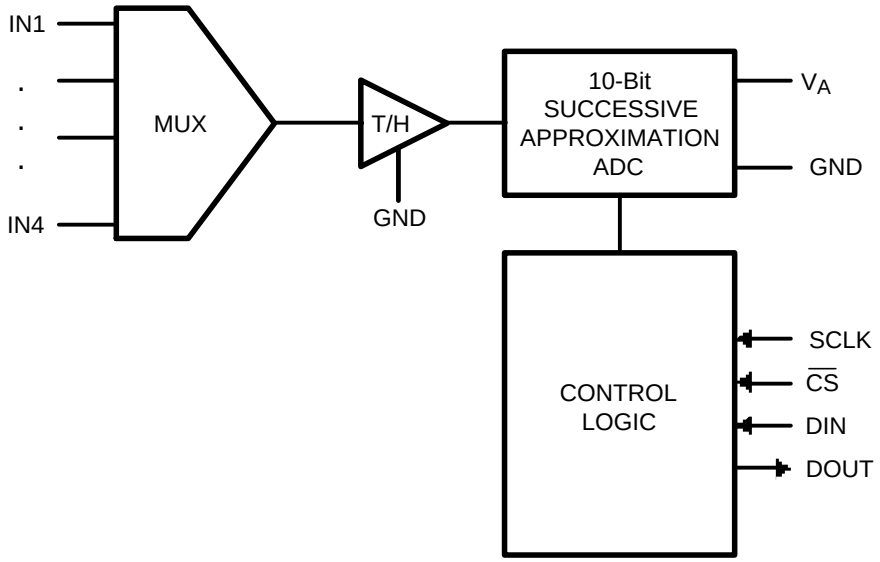

Pin Descriptions and Equivalent Circuits

Pin No.	Pin Name	Description
ANALOG I/O		
4-7	IN1 to IN4	Analog inputs. These signals can range from 0V to V_A.
DIGITAL I/O		
10	SCLK	Digital clock input. This clock directly controls the conversion and readout processes.
9	DOUT	Digital data output. The output samples are clocked out of this pin on falling edges of the SCLK pin.
8	DIN	Digital data input. The ADC104S101's Control Register is loaded through this pin on rising edges of the SCLK pin.
1	$\overline{CS}$	Chip select. On the falling edge of $\overline{CS}$, a conversion process begins. Conversions continue as long as $\overline{CS}$ is held low.
POWER SUPPLY		
2	V_A	Positive supply pin. This pin should be connected to a quiet +2.7V to +5.25V source and bypassed to GND with a 1 µF capacitor and a 0.1 µF monolithic capacitor located within 1 cm of the power pin.
3	GND	The ground return for the supply and signals.

Copyright © 2005–2013, Texas Instruments Incorporated

These devices have limited built-in ESD protection. The leads should be shorted together or the device placed in conductive foam during storage or handling to prevent electrostatic damage to the MOS gates.

Absolute Maximum Ratings[1][2][3]

Supply Voltage V_A		−0.3V to 6.5V
Voltage on Any Pin to GND		−0.3V to V_A +0.3V
Input Current at Any Pin[4]		±10 mA
Package Input Current[4]		±20 mA
Power Consumption at T_A = 25°C		See[5]
ESD Susceptibility[6]	Human Body Model	2500V
	Machine Model	250V
Junction Temperature		+150°C
Storage Temperature		−65°C to +150°C

(1) Absolute Maximum Ratings indicate limits beyond which damage to the device may occur. Operating Ratings indicate conditions for which the device is functional, but do not ensure specific performance limits. For ensured specifications and test conditions, see the Electrical Characteristics. The ensured specifications apply only for the test conditions listed. Some performance characteristics may degrade when the device is not operated under the listed test conditions.
(2) All voltages are measured with respect to GND = 0V, unless otherwise specified.
(3) If Military/Aerospace specified devices are required, please contact the Texas Instruments Sales Office/ Distributors for availability and specifications.
(4) When the input voltage at any pin exceeds the power supply (that is, V_{IN} < GND or V_{IN} > V_A), the current at that pin should be limited to 10 mA. The 20 mA maximum package input current rating limits the number of pins that can safely exceed the power supplies with an input current of 10 mA to two. The Absolute Maximum Rating specification does not apply to the V_A pin. The current into the V_A pin is limited by the Analog Supply Voltage specification.
(5) The absolute maximum junction temperature ($T_J$max) for this device is 150°C. The maximum allowable power dissipation is dictated by $T_J$max, the junction-to-ambient thermal resistance (θ_{JA}), and the ambient temperature (T_A), and can be calculated using the formula P_DMAX = ($T_J$max − T_A)/θ_{JA}. The values for maximum power dissipation listed above will be reached only when the device is operated in a severe fault condition (e.g. when input or output pins are driven beyond the power supply voltages, or the power supply polarity is reversed). Obviously, such conditions should always be avoided.
(6) Human body model is 100 pF capacitor discharged through a 1.5 kΩ resistor. Machine model is 220 pF discharged through zero ohms.

Operating Ratings[1][2]

Operating Temperature Range	−40°C ≤ T_A ≤ +85°C
V_A Supply Voltage	+2.7V to +5.25V
Digital Input Pins Voltage Range	−0.3V to V_A
Clock Frequency	50 kHz to 16 MHz
Analog Input Voltage	0V to V_A

(1) Absolute Maximum Ratings indicate limits beyond which damage to the device may occur. Operating Ratings indicate conditions for which the device is functional, but do not ensure specific performance limits. For ensured specifications and test conditions, see the Electrical Characteristics. The ensured specifications apply only for the test conditions listed. Some performance characteristics may degrade when the device is not operated under the listed test conditions.
(2) All voltages are measured with respect to GND = 0V, unless otherwise specified.

Package Thermal Resistance[1]

Package	θ_{JA}
10-lead VSSOP	190°C / W

(1) Soldering process must comply with Reflow Temperature Profile specifications. Refer to www.ti.com/packaging. Reflow temperature profiles are different for lead-free and non-lead-free packages.

Copyright © 2005–2013, Texas Instruments Incorporated

ADC104S101 Converter Electrical Characteristics[1]

The following specifications apply for V_A = +2.7V to 5.25V, GND = 0V, C_L = 50 pF, f_{SCLK} = 8 MHz to 16 MHz, f_{SAMPLE} = 500 ksps to 1 Msps, unless otherwise noted. **Boldface limits apply for $T_A = T_{MIN}$ to T_{MAX}**; all other limits T_A = 25°C.

Parameter		Test Conditions	Typical	Limits[2]	Units
STATIC CONVERTER CHARACTERISTICS					
	Resolution with No Missing Codes			**10**	Bits
INL	Integral Non-Linearity		+0.4	**+0.7**	LSB (max)
			−0.1	**−0.5**	LSB (min)
DNL	Differential Non-Linearity		+0.26	**+0.6**	LSB (max)
			−0.16	**−0.6**	LSB (min)
V_{OFF}	Offset Error		+0.19	**±0.6**	LSB (max)
OEM	Channel to Channel Offset Error Match		0.02	**±0.6**	LSB (max)
FSE	Full Scale Error		−0.15	**±0.7**	LSB (max)
FSEM	Channel to Channel Full Scale Error Match		0.02	**±0.5**	LSB (max)
DYNAMIC CONVERTER CHARACTERISTICS					
SINAD	Signal-to-Noise Plus Distortion Ratio	V_A = +2.7V to 5.25V f_{IN} = 40.3 kHz, −0.02 dBFS	61.6	**61**	dB (min)
SNR	Signal-to-Noise Ratio	V_A = +2.7V to 5.25V f_{IN} = 40.3 kHz, −0.02 dBFS	61.7	**61.3**	dB (min)
THD	Total Harmonic Distortion	V_A = +2.7V to 5.25V f_{IN} = 40.3 kHz, −0.02 dBFS	−82	**−72**	dB (max)
SFDR	Spurious-Free Dynamic Range	V_A = +2.7V to 5.25V f_{IN} = 40.3 kHz, −0.02 dBFS	83	**75**	dB (min)
ENOB	Effective Number of Bits	V_A = +2.7V to 5.25V f_{IN} = 40.3 kHz, −0.02 dBFS	9.9	**9.8**	Bits (min)
	Channel-to-Channel Crosstalk	V_A = +5.25V, f_{IN} = 40.3 kHz	−78		dB
IMD	Intermodulation Distortion, Second Order Terms	V_A = +5.25V f_a = 40.161 kHz, f_b = 41.015 kHz	−82		dB
	Intermodulation Distortion, Third Order Terms	V_A = +5.25V f_a = 40.161 kHz, f_b = 41.015 kHz	−81		dB
FPBW	-3 dB Full Power Bandwidth	V_A = +5V	11		MHz
		V_A = +3V	8		MHz
ANALOG INPUT CHARACTERISTICS					
V_{IN}	Input Range		0 to V_A		V
I_{DCL}	DC Leakage Current			**±1**	µA (max)
C_{INA}	Input Capacitance	Track Mode	33		pF
		Hold Mode	3		pF
DIGITAL INPUT CHARACTERISTICS					
V_{IH}	Input High Voltage	V_A = +5.25V		**2.4**	V (min)
		V_A = +3.6V		**2.1**	V (min)
V_{IL}	Input Low Voltage			**0.8**	V (max)
I_{IN}	Input Current	V_{IN} = 0V or V_A	±0.2	**±10**	µA (max)
C_{IND}	Digital Input Capacitance		2	**4**	pF (max)

(1) Min/max specification limits are ensured by design, test, or statistical analysis.
(2) Tested limits are ensured to TI's AOQL (Average Outgoing Quality Level).

Copyright © 2005–2013, Texas Instruments Incorporated

ADC104S101 Converter Electrical Characteristics[1] (continued)

The following specifications apply for V_A = +2.7V to 5.25V, GND = 0V, C_L = 50 pF, f_{SCLK} = 8 MHz to 16 MHz, f_{SAMPLE} = 500 ksps to 1 Msps, unless otherwise noted. **Boldface limits apply for $T_A = T_{MIN}$ to T_{MAX}**; all other limits T_A = 25°C.

Parameter		Test Conditions	Typical	Limits[2]	Units
DIGITAL OUTPUT CHARACTERISTICS					
V_{OH}	Output High Voltage	I_{SOURCE} = 200 µA	V_A − 0.03	**V_A − 0.5**	V (min)
		I_{SOURCE} = 1 mA	V_A − 0.1		V
V_{OL}	Output Low Voltage	I_{SINK} = 200 µA	0.03	**0.4**	V (max)
		I_{SINK} = 1 mA	0.1		V
I_{OZH}, I_{OZL}	TRI-STATE Leakage Current		±0.01	**±1**	µA (max)
C_{OUT}	TRI-STATE Output Capacitance		2	**4**	pF (max)
	Output Coding		Straight (Natural) Binary		
POWER SUPPLY CHARACTERISTICS (C_L = 10 pF)					
V_A	Supply Voltage			**2.7**	V (min)
				5.25	V (max)
I_A	Supply Current, Normal Mode (Operational, $\overline{CS}$ low)	V_A = +5.25V, f_{SAMPLE} = 1 Msps, f_{IN} = 40 kHz	2.18	**2.7**	mA (max)
		V_A = +3.6V, f_{SAMPLE} = 1 Msps, f_{IN} = 40 kHz	1.08	**1.3**	mA (max)
	Supply Current, Shutdown ($\overline{CS}$ high)	V_A = +5.25V, f_{SAMPLE} = 0 ksps	90		nA
		V_A = +3.6V, f_{SAMPLE} = 0 ksps	33		nA
P_D	Power Consumption, Normal Mode (Operational, $\overline{CS}$ low)	V_A = +5.25V	11.4	**14.2**	mW (max)
		V_A = +3.6V	3.9	**4.7**	mW (max)
	Power Consumption, Shutdown ($\overline{CS}$ high)	V_A = +5.25V	0.47		µW
		V_A = +3.6V	0.12		µW
AC ELECTRICAL CHARACTERISTICS					
f_{SCLK}	Clock Frequency	See[3]		**8**	MHz (min)
				16	MHz (max)
f_S	Sample Rate	See[3]		**500**	ksps (min)
				1	Msps (max)
t_{CONV}	Conversion Time			**13**	SCLK cycles
DC	SCLK Duty Cycle	f_{CLK} = 16 MHz	50	**30**	% (min)
				70	% (max)
t_{ACQ}	Track/Hold Acquisition Time	Full-Scale Step Input		**3**	SCLK cycles
	Throughput Time	Acquisition Time + Conversion Time		**16**	SCLK cycles

(3) This is the frequency range over which the electrical performance is specified. The device is functional over a wider range which is specified under Operating Ratings.

Copyright © 2005–2013, Texas Instruments Incorporated

ADC104S101 Timing Specifications

The following specifications apply for V_A = +2.7V to 5.25V, GND = 0V, C_L = 50 pF, f_{SCLK} = 8 MHz to 16 MHz, f_{SAMPLE} = 500 ksps to 1 Msps, **Boldface limits apply for $T_A = T_{MIN}$ to T_{MAX}**: all other limits T_A = 25°C.

Parameter		Test Conditions		Typical	Limits (1)	Units
t_{CSU}	Setup Time SCLK High to $\overline{CS}$ Falling Edge	See (2)	V_A = +3.0V	−3.5	**10**	ns (min)
			V_A = +5.0V	−0.5		
t_{CLH}	Hold time SCLK Low to $\overline{CS}$ Falling Edge	See (2)	V_A = +3.0V	+4.5	**10**	ns (min)
			V_A = +5.0V	+1.5		
t_{EN}	Delay from $\overline{CS}$ Until DOUT active		V_A = +3.0V	+4	**30**	ns (max)
			V_A = +5.0V	+2		
t_{ACC}	Data Access Time after SCLK Falling Edge		V_A = +3.0V	+16.5	**30**	ns (max)
			V_A = +5.0V	+15		
t_{SU}	Data Setup Time Prior to SCLK Rising Edge			+3	**10**	ns (min)
t_H	Data Valid SCLK Hold Time			+3	**10**	ns (min)
t_{CH}	SCLK High Pulse Width			0.5 x t_{SCLK}	**0.3 x t_{SCLK}**	ns (min)
t_{CL}	SCLK Low Pulse Width			0.5 x t_{SCLK}	**0.3 x t_{SCLK}**	ns (min)
t_{DIS}	$\overline{CS}$ Rising Edge to DOUT High-Impedance	Output Falling	V_A = +3.0V	1.7	**20**	ns (max)
			V_A = +5.0V	1.2		
		Output Rising	V_A = +3.0V	1.0		
			V_A = +5.0V	1.0		

(1) Tested limits are ensured to TI's AOQL (Average Outgoing Quality Level).
(2) Clock may be either high or low when $\overline{CS}$ is asserted as long as setup and hold times t_{CSU} and t_{CLH} are strictly observed.

Copyright © 2005–2013, Texas Instruments Incorporated

Timing Diagrams

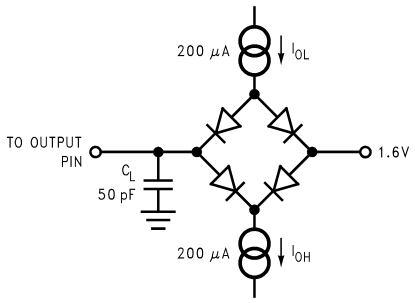

Figure 2. Timing Test Circuit

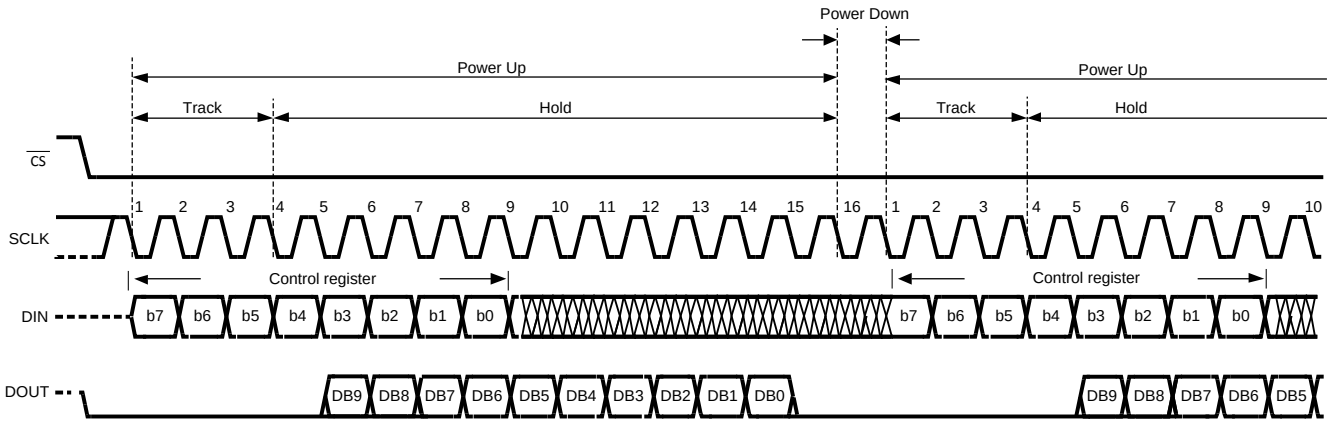

Figure 3. ADC104S101 Operational Timing Diagram

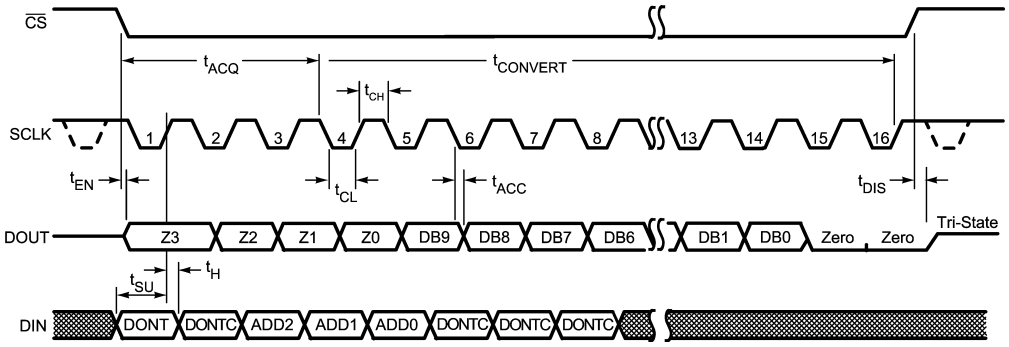

Figure 4. ADC104S101 Serial Timing Diagram

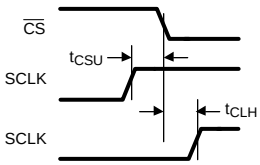

Figure 5. SCLK and $\overline{CS}$ Timing Parameters

Specification Definitions

ACQUISITION TIME is the time required to acquire the input voltage. That is, it is time required for the hold capacitor to charge up to the input voltage.

APERTURE DELAY is the time between the fourth falling SCLK edge of a conversion and the time when the input signal is acquired or held for conversion.

CONVERSION TIME is the time required, after the input voltage is acquired, for the ADC to convert the input voltage to a digital word.

CROSSTALK is the coupling of energy from one channel into the other channel, or the amount of signal energy from one analog input that appears at the measured analog input.

DIFFERENTIAL NON-LINEARITY (DNL) is the measure of the maximum deviation from the ideal step size of 1 LSB.

DUTY CYCLE is the ratio of the time that a repetitive digital waveform is high to the total time of one period. The specification here refers to the SCLK.

EFFECTIVE NUMBER OF BITS (ENOB, or EFFECTIVE BITS) is another method of specifying Signal-to-Noise and Distortion or SINAD. ENOB is defined as (SINAD − 1.76) / 6.02 and says that the converter is equivalent to a perfect ADC of this (ENOB) number of bits.

FULL POWER BANDWIDTH is a measure of the frequency at which the reconstructed output fundamental drops 3 dB below its low frequency value for a full scale input.

FULL SCALE ERROR (FSE) is a measure of how far the last code transition is from the ideal 1½ LSB below V_{REF^+} and is defined as:

$$V_{FSE} = V_{max} + 1.5\ LSB - V_{REF^+} \quad (1)$$

where

- V_{max} is the voltage at which the transition to the maximum code occurs. FSE can be expressed in Volts, LSB or percent of full scale range.

GAIN ERROR is the deviation of the last code transition (111...110) to (111...111) from the ideal (V_{REF} − 1.5 LSB), after adjusting for offset error.

INTEGRAL NON-LINEARITY (INL) is a measure of the deviation of each individual code from a line drawn from negative full scale (½ LSB below the first code transition) through positive full scale (½ LSB above the last code transition). The deviation of any given code from this straight line is measured from the center of that code value.

INTERMODULATION DISTORTION (IMD) is the creation of additional spectral components as a result of two sinusoidal frequencies being applied to the ADC input at the same time. It is defined as the ratio of the power in the second and third order intermodulation products to the power in one of the original frequencies. IMD is usually expressed in dB.

MISSING CODES are those output codes that will never appear at the ADC outputs. These codes cannot be reached with any input value. The ADC104S101 is specified not to have any missing codes.

OFFSET ERROR is the deviation of the first code transition (000...000) to (000...001) from the ideal (i.e. GND + 0.5 LSB).

SIGNAL TO NOISE RATIO (SNR) is the ratio, expressed in dB, of the rms value of the input signal to the rms value of the sum of all other spectral components below one-half the sampling frequency, not including d.c. or the harmonics included in THD.

SIGNAL TO NOISE PLUS DISTORTION (S/N+D or SINAD) Is the ratio, expressed in dB, of the rms value of the input signal to the rms value of all of the other spectral components below half the clock frequency, including harmonics but excluding d.c.

SPURIOUS FREE DYNAMIC RANGE (SFDR) is the difference, expressed in dB, between the rms values of the input signal and the peak spurious signal where a spurious signal is any signal present in the output spectrum that is not present at the input, excluding d.c.

Copyright © 2005–2013, Texas Instruments Incorporated

TOTAL HARMONIC DISTORTION (THD) is the ratio, expressed in dB or dBc, of the rms total of the first five harmonic components at the output to the rms level of the input signal frequency as seen at the output. THD is calculated as

$$THD = 20 \cdot \log_{10} \sqrt{\frac{A_{f2}^2 + \cdots + A_{f6}^2}{A_{f1}^2}} \quad (2)$$

where

- A_{f1} is the RMS power of the input frequency at the output and A_{f2} through A_{f6} are the RMS power in the first 5 harmonic frequencies.

THROUGHPUT TIME is the minimum time required between the start of two successive conversion. It is the acquisition time plus the conversion and read out times. In the case of the ADC104S101, this is 16 SCLK periods.

Typical Performance Characteristics

T_A = +25°C, f_{SAMPLE} = 500 ksps to 1 Msps, f_{SCLK} = 8 MHz to 16 MHz, f_{IN} = 40.3 kHz unless otherwise stated.

DNL - V_A = 3.0V

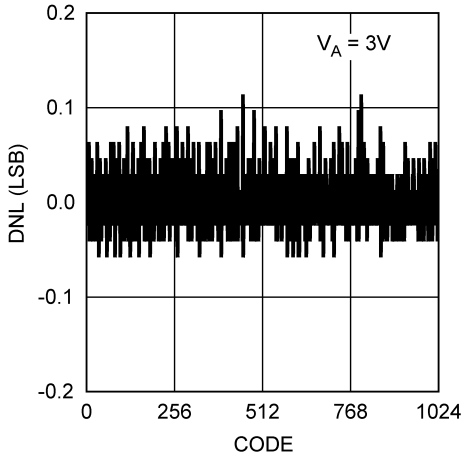

Figure 6.

INL - V_A = 3.0V

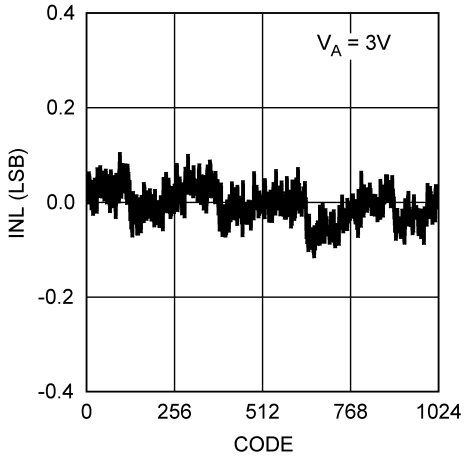

Figure 7.

DNL - V_A = 5.0V

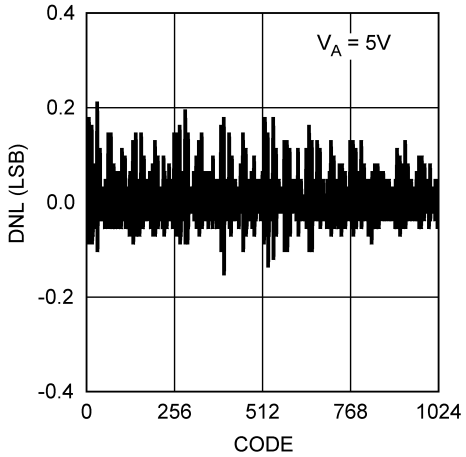

Figure 8.

INL - V_A = 5.0V

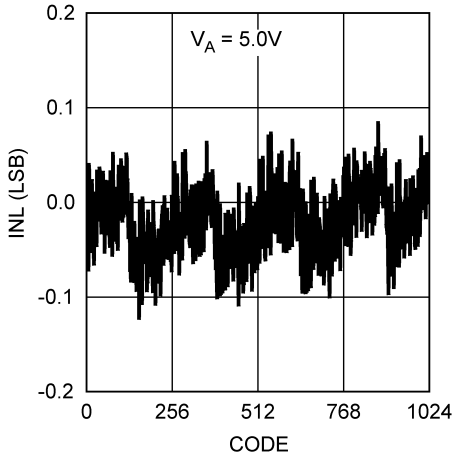

Figure 9.

DNL vs. Supply

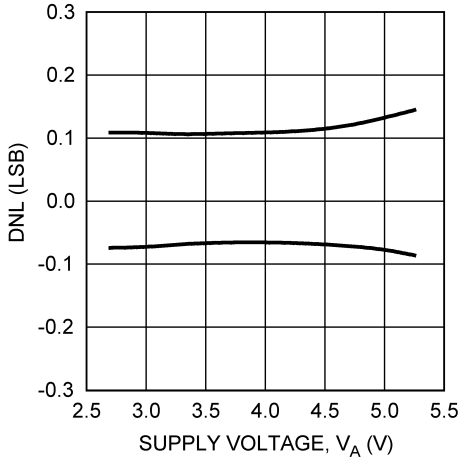

Figure 10.

INL vs. Supply

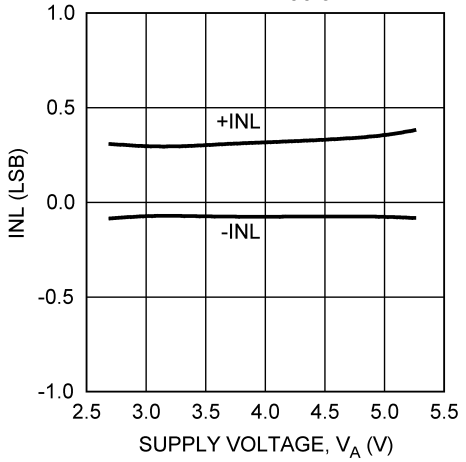

Figure 11.

Copyright © 2005–2013, Texas Instruments Incorporated

Typical Performance Characteristics (continued)

T_A = +25°C, f_{SAMPLE} = 500 ksps to 1 Msps, f_{SCLK} = 8 MHz to 16 MHz, f_{IN} = 40.3 kHz unless otherwise stated.

DNL vs. Clock Frequency

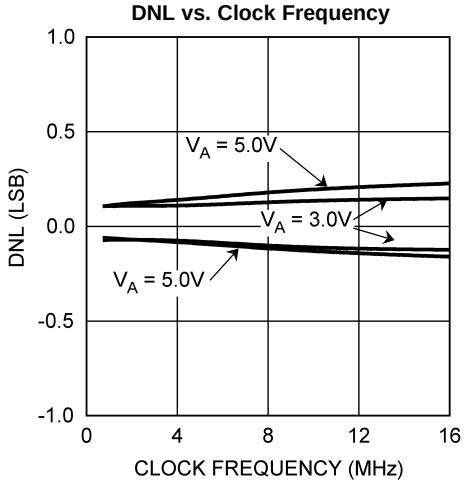

Figure 12.

INL vs. Clock Frequency

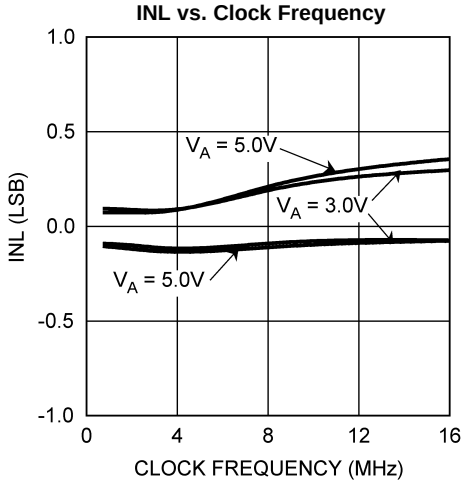

Figure 13.

DNL vs. Clock Duty Cycle

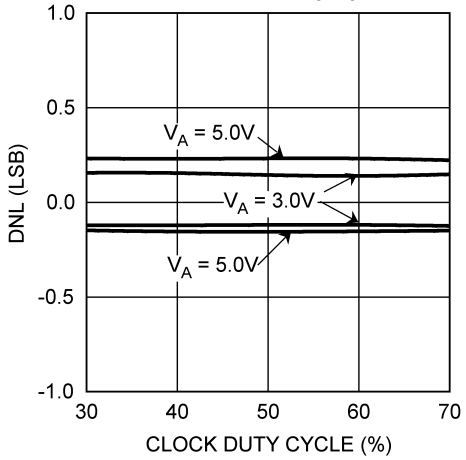

Figure 14.

INL vs. Clock Duty Cycle

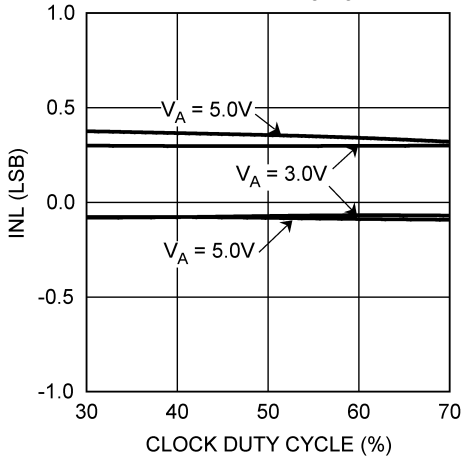

Figure 15.

DNL vs. Temperature

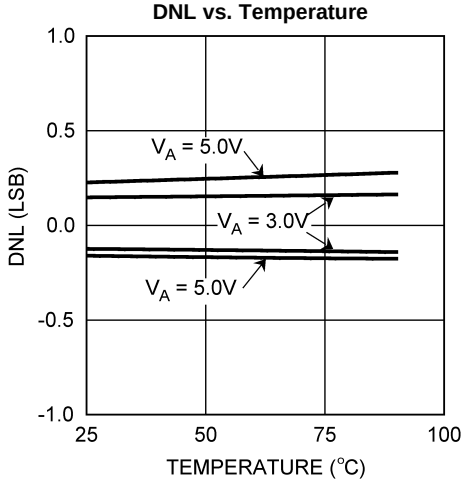

Figure 16.

INL vs. Temperature

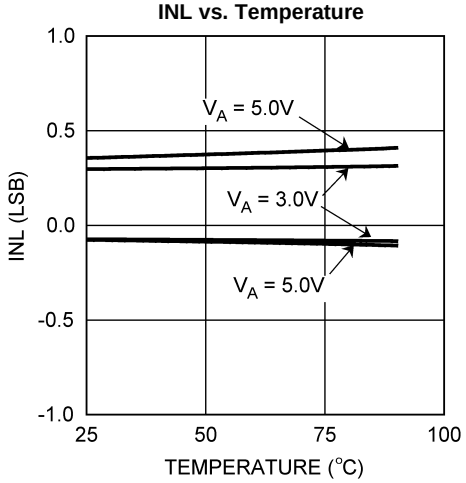

Figure 17.

Copyright © 2005–2013, Texas Instruments Incorporated

Typical Performance Characteristics (continued)

T_A = +25°C, f_{SAMPLE} = 500 ksps to 1 Msps, f_{SCLK} = 8 MHz to 16 MHz, f_{IN} = 40.3 kHz unless otherwise stated.

SNR vs. Supply

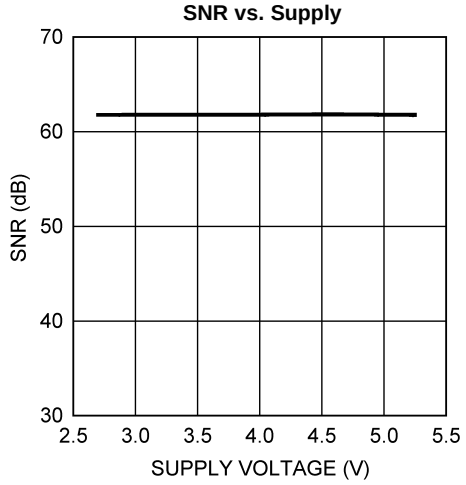

Figure 18.

THD vs. Supply

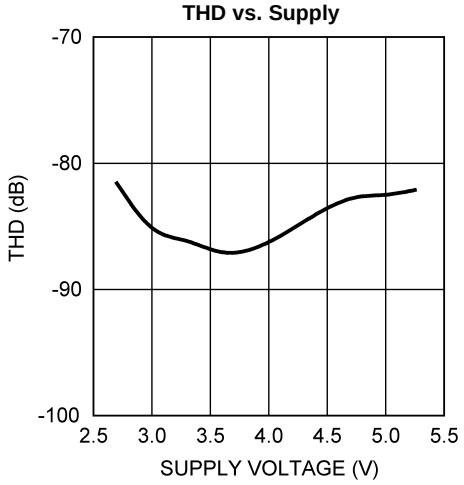

Figure 19.

SNR vs. Clock Frequency

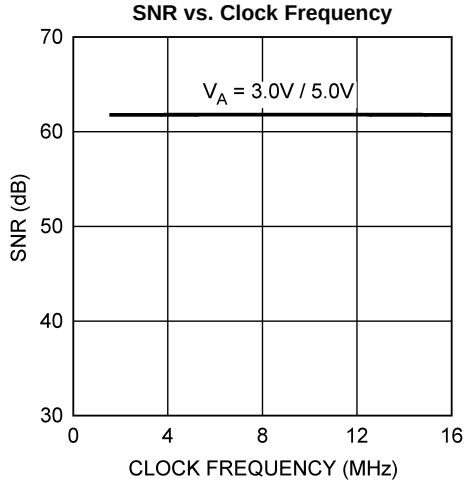

Figure 20.

THD vs. Clock Frequency

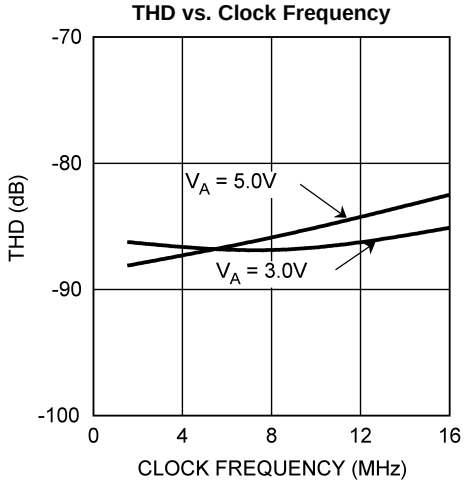

Figure 21.

SNR vs. Clock Duty Cycle

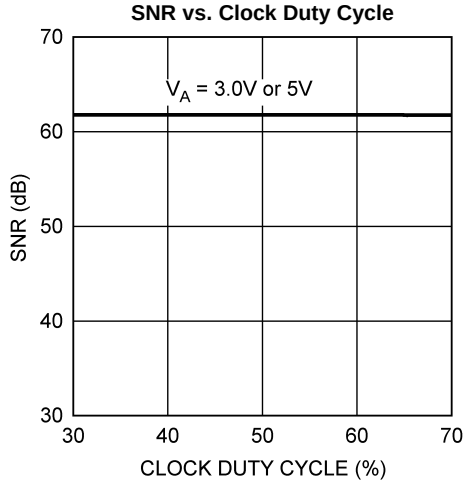

Figure 22.

THD vs. Clock Duty Cycle

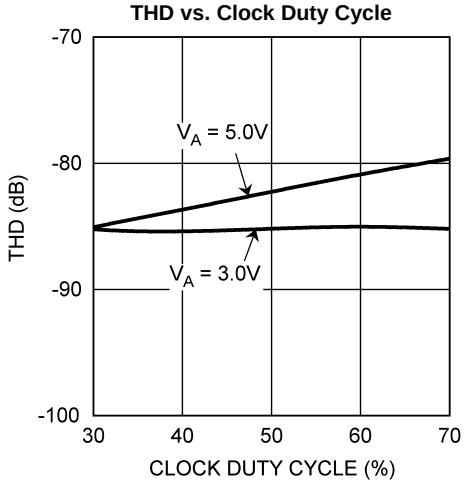

Figure 23.

Copyright © 2005–2013, Texas Instruments Incorporated

Typical Performance Characteristics (continued)

T_A = +25°C, f_{SAMPLE} = 500 ksps to 1 Msps, f_{SCLK} = 8 MHz to 16 MHz, f_{IN} = 40.3 kHz unless otherwise stated.

SNR vs. Input Frequency

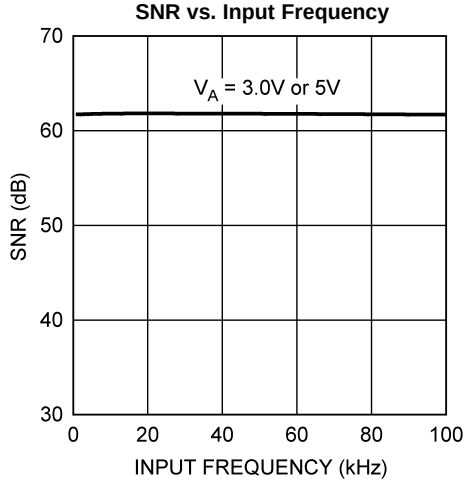

Figure 24.

THD vs. Input Frequency

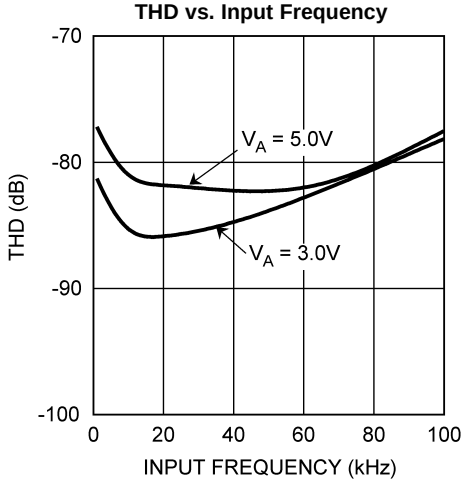

Figure 25.

SNR vs. Temperature

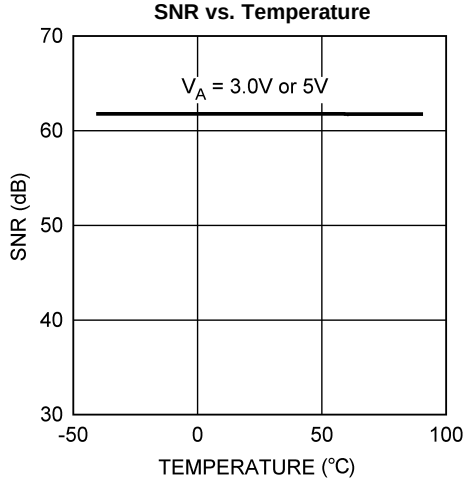

Figure 26.

THD vs. Temperature

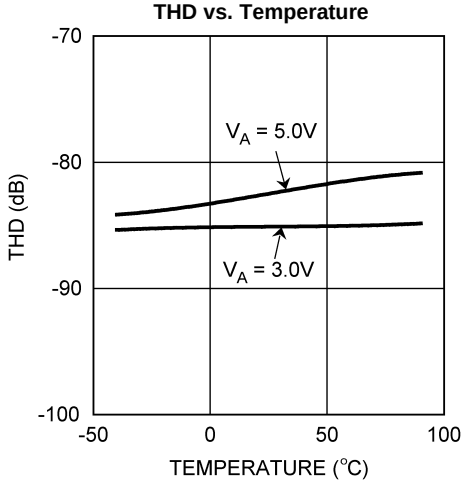

Figure 27.

SFDR vs. Supply

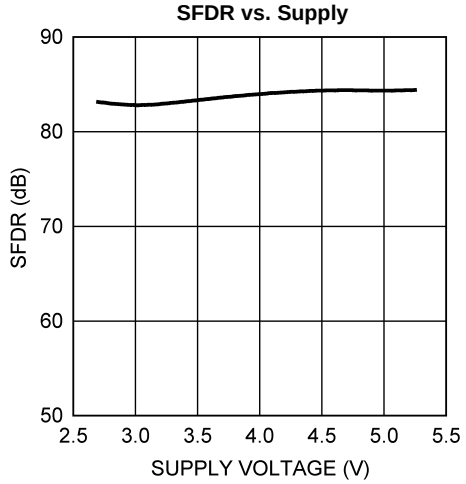

Figure 28.

SINAD vs. Supply

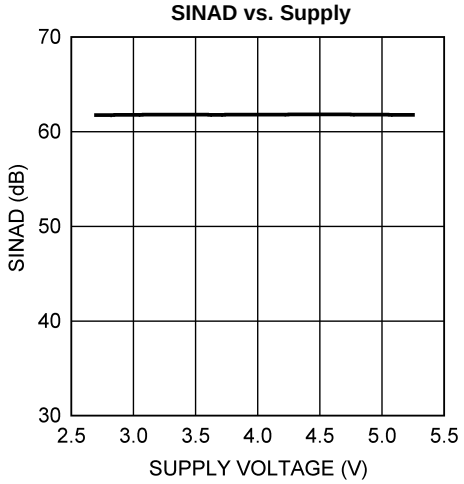

Figure 29.

Typical Performance Characteristics (continued)

T_A = +25°C, f_{SAMPLE} = 500 ksps to 1 Msps, f_{SCLK} = 8 MHz to 16 MHz, f_{IN} = 40.3 kHz unless otherwise stated.

SFDR vs. Clock Frequency

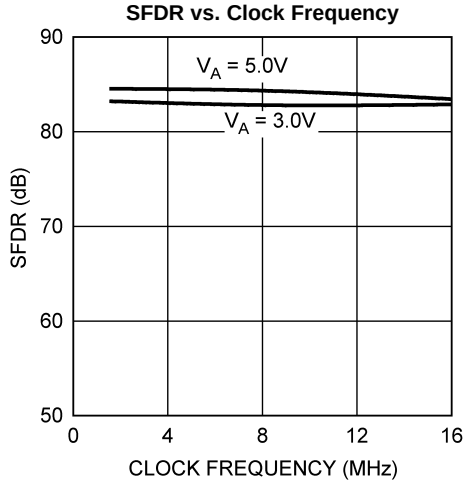

Figure 30.

SINAD vs. Clock Frequency

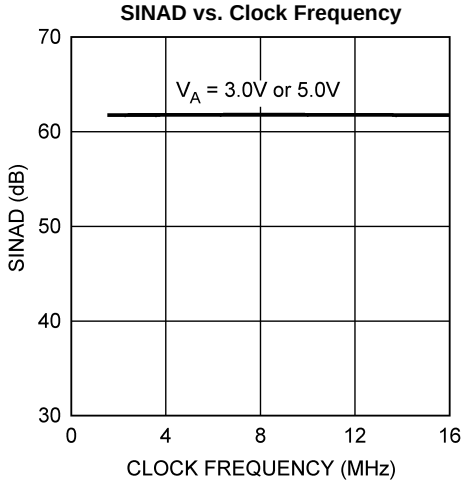

Figure 31.

SFDR vs. Clock Duty Cycle

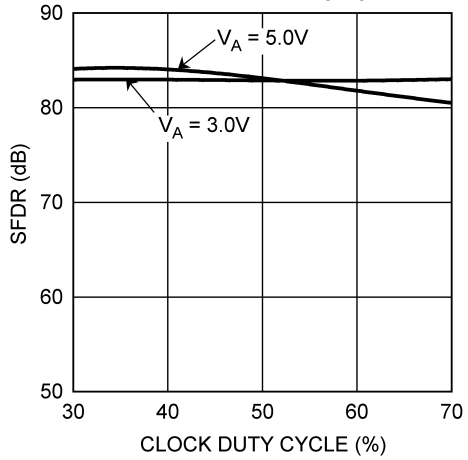

Figure 32.

SINAD vs. Clock Duty Cycle

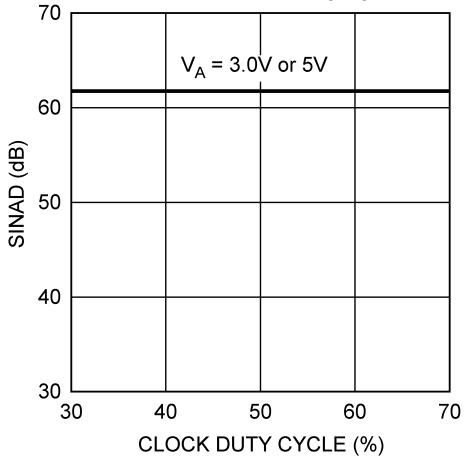

Figure 33.

SFDR vs. Input Frequency

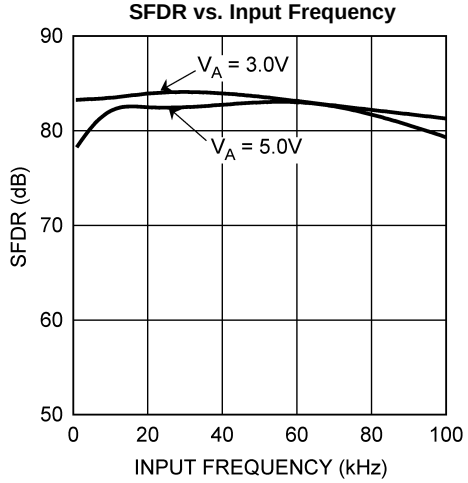

Figure 34.

SINAD vs. Input Frequency

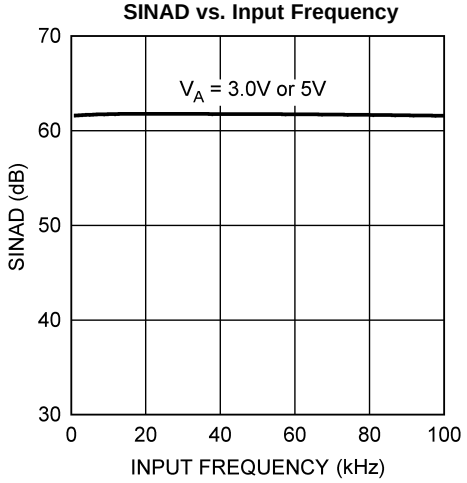

Figure 35.

Copyright © 2005–2013, Texas Instruments Incorporated

Typical Performance Characteristics (continued)

T_A = +25°C, f_{SAMPLE} = 500 ksps to 1 Msps, f_{SCLK} = 8 MHz to 16 MHz, f_{IN} = 40.3 kHz unless otherwise stated.

SFDR vs. Temperature

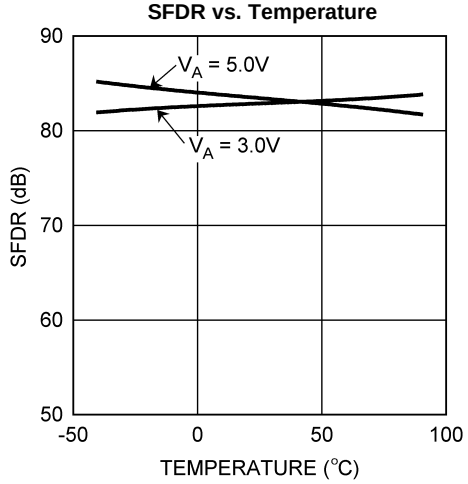

Figure 36.

SINAD vs. Temperature

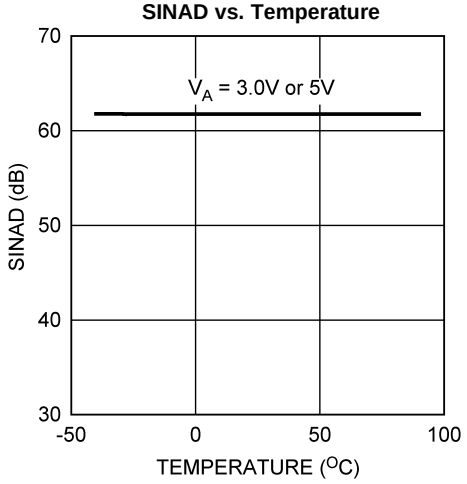

Figure 37.

ENOB vs. Supply

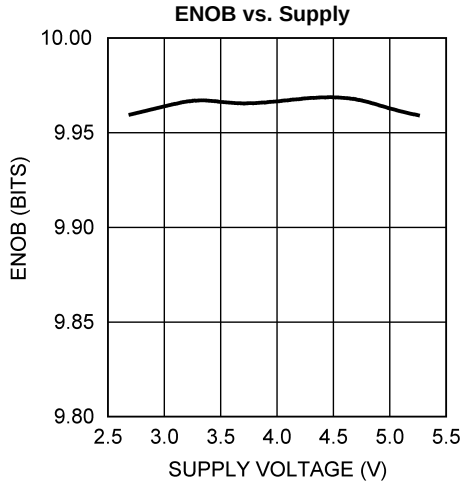

Figure 38.

ENOB vs. Clock Frequency

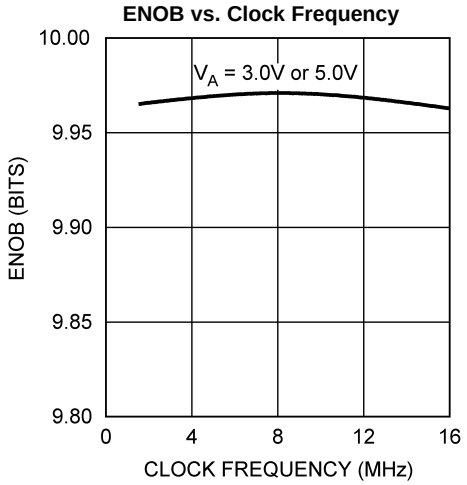

Figure 39.

ENOB vs. Clock Duty Cycle

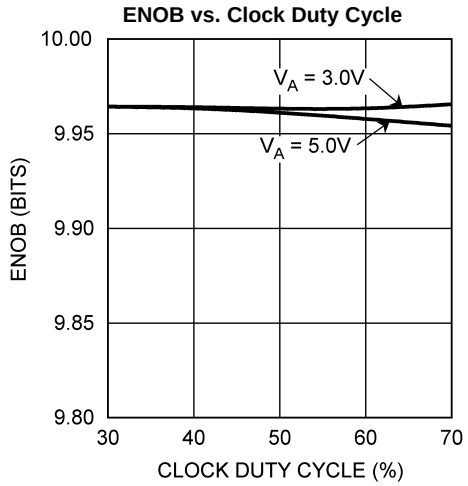

Figure 40.

ENOB vs. Input Frequency

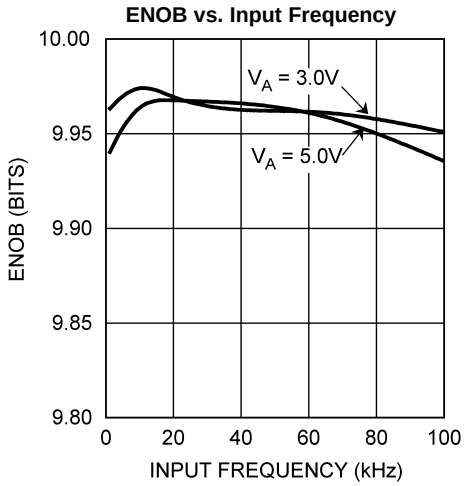

Figure 41.

Typical Performance Characteristics (continued)

T_A = +25°C, f_{SAMPLE} = 500 ksps to 1 Msps, f_{SCLK} = 8 MHz to 16 MHz, f_{IN} = 40.3 kHz unless otherwise stated.

ENOB vs. Temperature

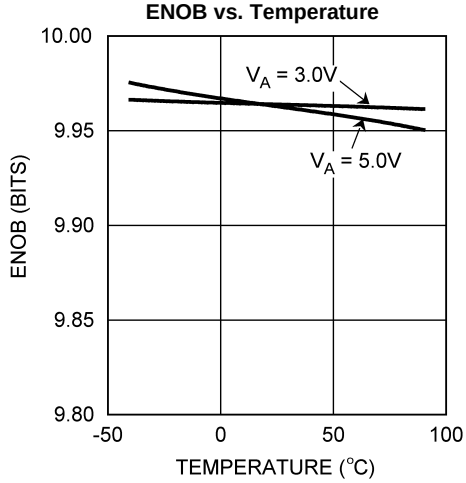

Figure 42.

Spectral Response - 3V, 500 ksps

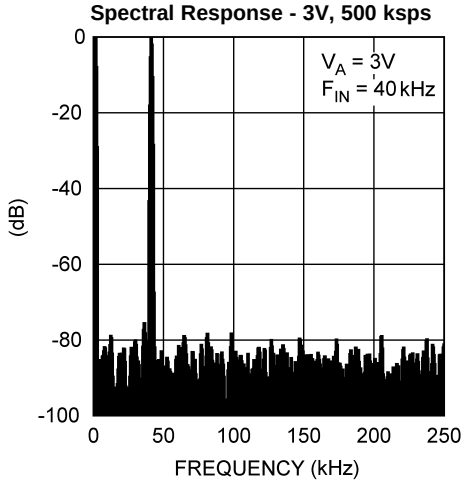

Figure 43.

Spectral Response - 5V, 500 ksps

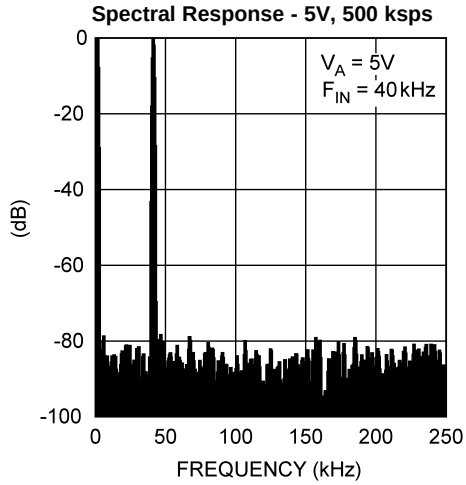

Figure 44.

Spectral Response - 3V, 1.0 Msps

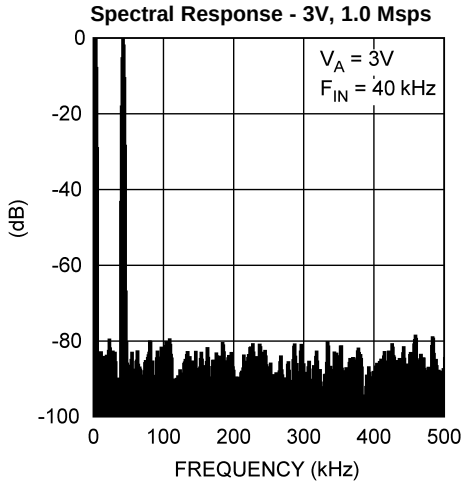

Figure 45.

Spectral Response - 5V, 1.0 Msps

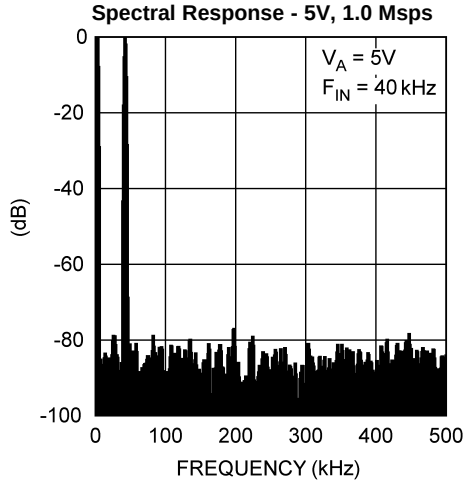

Figure 46.

Power Consumption vs. Throughput

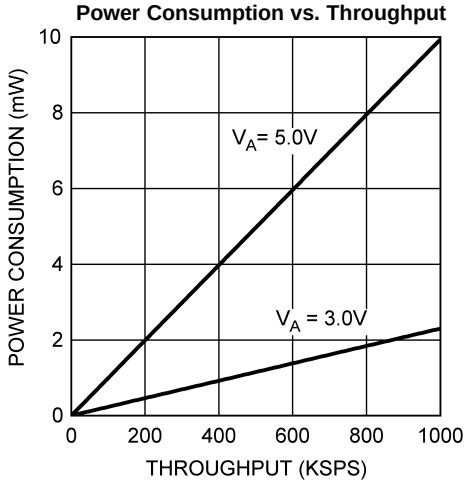

Figure 47.

Copyright © 2005–2013, Texas Instruments Incorporated

APPLICATIONS INFORMATION

ADC104S101 OPERATION

The ADC104S101 is a successive-approximation analog-to-digital converter designed around a charge-redistribution digital-to-analog converter. Simplified schematics of the ADC104S101 in both track and hold modes are shown in Figure 48 and Figure 49, respectively. In Figure 48, the ADC104S101 is in track mode: switch SW1 connects the sampling capacitor to one of four analog input channels through the multiplexer, and SW2 balances the comparator inputs. The ADC104S101 is in this state for the first three SCLK cycles after $\overline{CS}$ is brought low.

Figure 49 shows the ADC104S101 in hold mode: switch SW1 connects the sampling capacitor to ground, maintaining the sampled voltage, and switch SW2 unbalances the comparator. The control logic then instructs the charge-redistribution DAC to add fixed amounts of charge to the sampling capacitor until the comparator is balanced. When the comparator is balanced, the digital word supplied to the DAC is the digital representation of the analog input voltage. The ADC104S101 is in this state for the fourth through sixteenth SCLK cycles after $\overline{CS}$ is brought low.

The time when $\overline{CS}$ is low is considered a serial frame. Each of these frames should contain an integer multiple of 16 SCLK cycles, during which time a conversion is performed and clocked out at the DOUT pin and data is clocked into the DIN pin to indicate the multiplexer address for the next conversion.

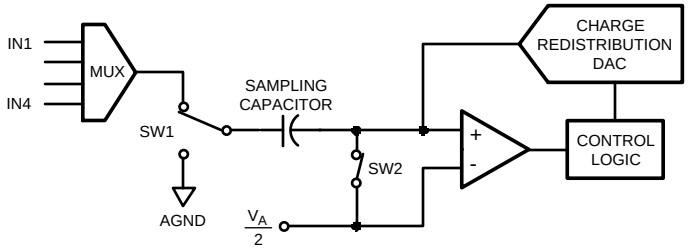

Figure 48. ADC104S101 in Track Mode

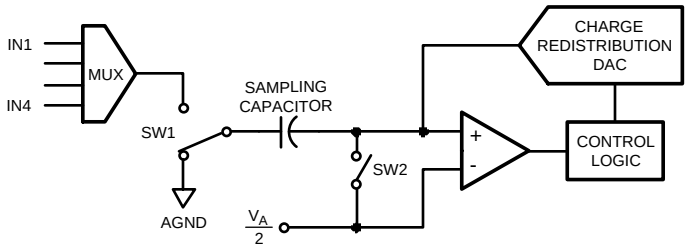

Figure 49. ADC104S101 in Hold Mode

USING THE ADC104S101

An ADC104S101 timing diagram and a serial interface timing diagram for the ADC104S101 are shown in the Timing Diagrams section. $\overline{CS}$ is chip select, which initiates conversions and frames the serial data transfers. SCLK (serial clock) controls both the conversion process and the timing of serial data. DOUT is the serial data output pin, where a conversion result is sent as a serial data stream, MSB first. Data to be written to the ADC104S101's Control Register is placed on DIN, the serial data input pin. New data is written to the ADC at DIN with each conversion.

A serial frame is initiated on the falling edge of $\overline{CS}$ and ends on the rising edge of $\overline{CS}$. Each frame must contain an integer multiple of 16 rising SCLK edges. The ADC output data (DOUT) is in a high impedance state when $\overline{CS}$ is high and is active when $\overline{CS}$ is low. Thus, $\overline{CS}$ acts as an output enable. Additionally, the device goes into a power down state when $\overline{CS}$ is high, and also between continuous conversion cycles.

During the first 3 cycles of SCLK, the ADC is in the track mode, acquiring the input voltage. For the next 13 SCLK cycles the conversion is accomplished and the data is clocked out, MSB first, starting on the 5th clock. If there is more than one conversion in a frame, the ADC will re-enter the track mode on the falling edge of SCLK after the N*16th rising edge of SCLK, and re-enter the hold/convert mode on the N*16+4th falling edge of SCLK, where "N" is an integer.

Copyright © 2005–2013, Texas Instruments Incorporated

When $\overline{CS}$ is brought high, SCLK is internally gated off. If SCLK is stopped in the low state while $\overline{CS}$ is high, the subsequent fall of $\overline{CS}$ will generate a falling edge of the internal version of SCLK, putting the ADC into the track mode. This is seen by the ADC as the first falling edge of SCLK. If SCLK is stopped with SCLK high, the ADC enters the track mode on the first falling edge of SCLK after the falling edge of $\overline{CS}$.

During each conversion, data is clocked into the DIN pin on the first 8 rising edges of SCLK after the fall of $\overline{CS}$. For each conversion, it is necessary to clock in the data indicating the input that is selected for the conversion after the current one. See Table 2, Table 3, and Table 4.

If $\overline{CS}$ and SCLK go low within the times defined by t_{CSU} and t_{CLH}, the rising edge of SCLK that begins clocking data in at DIN may be one clock cycle later than expected. It is, therefore, best to strictly observe the minimum t_{CSU} and t_{CLH} times given in the Timing Specifications.

There are no power-up delays or dummy conversions required with the ADC104S101. The ADC is able to sample and convert an input to full conversion immediately following power up. The first conversion result after power-up will be that of IN1.

Table 2. Control Register Bits

Bit 7 (MSB)	Bit 6	Bit 5	Bit 4	Bit 3	Bit 2	Bit 1	Bit 0
DONTC	**DONTC**	**ADD2**	**ADD1**	**ADD0**	**DONTC**	**DONTC**	**DONTC**

Table 3. Control Register Bit Descriptions

Bit #:	Symbol:	Description
7 - 6, 2 - 0	DONTC	Don't care. The value of these bits do not affect device operation.
5	ADD2	These three bits determine which input channel will be sampled and converted in the next track/hold cycle. The mapping between codes and channels is shown in Table 4.
4	ADD1	
3	ADD0	

Table 4. Input Channel Selection

ADD2	ADD1	ADD0	Input Channel
x	0	0	IN1 (Default)
x	0	1	IN2
x	1	0	IN3
x	1	1	IN4

Copyright © 2005–2013, Texas Instruments Incorporated

ADC104S101 TRANSFER FUNCTION

The output format of the ADC104S101 is straight binary. Code transitions occur midway between successive integer LSB values. The LSB width for the ADC104S101 is $V_A/1024$. The ideal transfer characteristic is shown in Figure 50. The transition from an output code of 00 0000 0000 to a code of 00 0000 0001 is at 1/2 LSB, or a voltage of $V_A/2048$. Other code transitions occur at steps of one LSB.

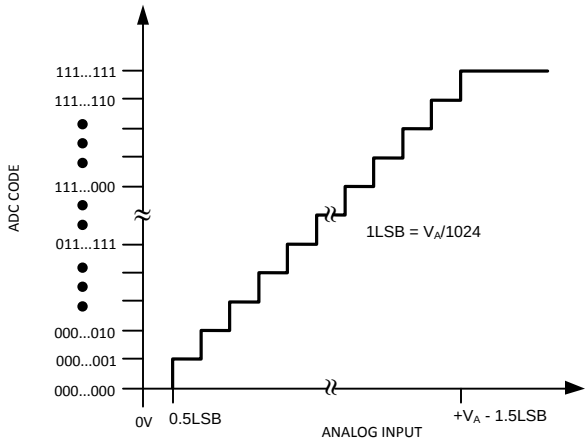

Figure 50. Ideal Transfer Characteristic

TYPICAL APPLICATION CIRCUIT

A typical application of the ADC104S101 is shown in Figure 51. Power is provided in this example by the Texas Instruments LP2950 low-dropout voltage regulator, available in a variety of fixed and adjustable output voltages. The power supply pin is bypassed with a capacitor network located close to the ADC104S101.

Because the reference for the ADC104S101 is the supply voltage, any noise on the supply will degrade device noise performance. To keep noise off the supply, use a dedicated linear regulator for this device, or provide sufficient decoupling from other circuitry to keep noise off the ADC104S101 supply pin. Because of the ADC104S101's low power requirements, it is also possible to use a precision reference as a power supply to maximize performance. The four-wire interface is also shown connected to a microprocessor or DSP.

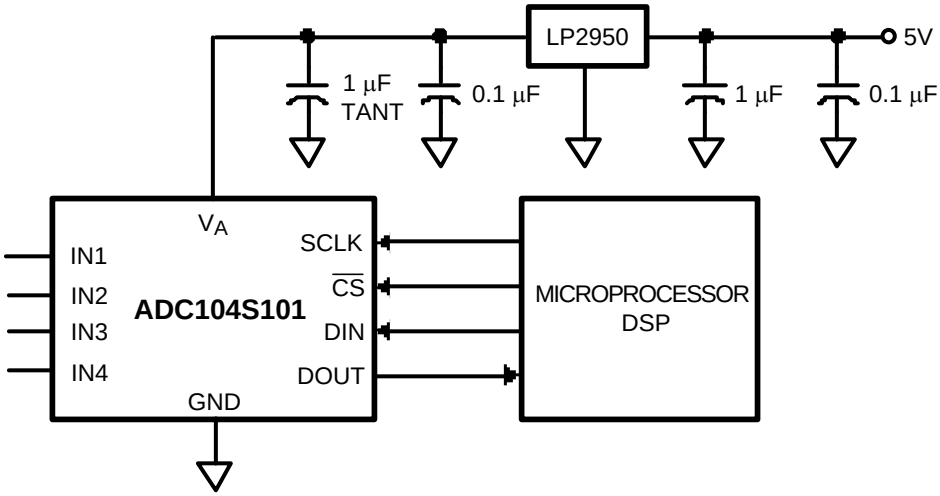

Figure 51. Typical Application Circuit

ANALOG INPUTS

An equivalent circuit for one of the ADC104S101's input channels is shown in Figure 52. Diodes D1 and D2 provide ESD protection for the analog inputs. At no time should any input go beyond (V_A + 300 mV) or (GND - 300 mV), as these ESD diodes will begin conducting, which could result in erratic operation. For this reason, these ESD diodes should NOT be used to clamp the input signal.

The capacitor C1 in Figure 52 has a typical value of 3 pF, and is mainly the package pin capacitance. Resistor R1 is the on resistance of the multiplexer and track / hold switch, and is typically 500 ohms. Capacitor C2 is the ADC104S101 sampling capacitor, and is typically 30 pF. The ADC104S101 will deliver best performance when driven by a low-impedance source to eliminate distortion caused by the charging of the sampling capacitance. This is especially important when using the ADC104S101 to sample AC signals. Also important when sampling dynamic signals is a band-pass or low-pass filter to reduce harmonics and noise, improving dynamic performance.

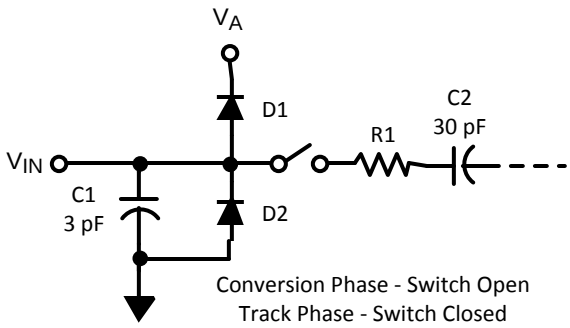

Figure 52. Equivalent Input Circuit

DIGITAL INPUTS AND OUTPUTS

The ADC104S101's digital output DOUT is limited by, and cannot exceed, the supply voltage, V_A. The digital input pins are not prone to latch-up and, and although not recommended, SCLK, $\overline{CS}$ and DIN may be asserted before V_A without any latch-up risk.

POWER SUPPLY CONSIDERATIONS

The ADC104S101 is fully powered-up whenever $\overline{CS}$ is low, and fully powered-down whenever $\overline{CS}$ is high, with one exception: the ADC104S101 automatically enters power-down mode between the 16th falling edge of a conversion and the 1st falling edge of the subsequent conversion (see Timing Diagrams).

The ADC104S101 can perform multiple conversions back to back; each conversion requires 16 SCLK cycles. The ADC104S101 will perform conversions continuously as long as $\overline{CS}$ is held low.

The user may trade off throughput for power consumption by simply performing fewer conversions per unit time. The Power Consumption vs. Sample Rate curve in the Typical Performance Characteristics section shows the typical power consumption of the ADC104S101 versus throughput. To calculate the power consumption, simply multiply the fraction of time spent in the normal mode by the normal mode power consumption, and add the fraction of time spent in shutdown mode multiplied by the shutdown mode power dissipation.

Copyright © 2005–2013, Texas Instruments Incorporated

Power Management

When the ADC104S101 is operated continuously in normal mode, the maximum throughput is $f_{SCLK}/16$. Throughput may be traded for power consumption by running f_{SCLK} at its maximum 16 MHz and performing fewer conversions per unit time, putting the ADC104S101 into shutdown mode between conversions. A plot of typical power consumption versus throughput is shown in the Typical Performance Characteristics section. To calculate the power consumption for a given throughput, multiply the fraction of time spent in the normal mode by the normal mode power consumption and add the fraction of time spent in shutdown mode multiplied by the shutdown mode power consumption. Generally, the user will put the part into normal mode and then put the part back into shutdown mode. Note that the curve of power consumption vs. throughput is nearly linear. This is because the power consumption in the shutdown mode is so small that it can be ignored for all practical purposes.

Power Supply Noise Considerations

The charging of any output load capacitance requires current from the power supply, V_A. The current pulses required from the supply to charge the output capacitance will cause voltage variations on the supply. If these variations are large enough, they could degrade SNR and SINAD performance of the ADC. Furthermore, discharging the output capacitance when the digital output goes from a logic high to a logic low will dump current into the die substrate, which is resistive. Load discharge currents will cause "ground bounce" noise in the substrate that will degrade noise performance if that current is large enough. The larger is the output capacitance, the more current flows through the die substrate and the greater is the noise coupled into the analog channel, degrading noise performance.

To keep noise out of the power supply, keep the output load capacitance as small as practical. If the load capacitance is greater than 50 pF, use a 100 Ω series resistor at the ADC output, located as close to the ADC output pin as practical. This will limit the charge and discharge current of the output capacitance and improve noise performance.

Copyright © 2005–2013, Texas Instruments Incorporated

REVISION HISTORY

Changes from Revision E (March 2013) to Revision F	Page
• Changed layout of National Data Sheet to TI format	21

Copyright © 2005–2013, Texas Instruments Incorporated

PACKAGING INFORMATION

Orderable Device	Status (1)	Package Type	Package Drawing	Pins	Package Qty	Eco Plan (2)	Lead/Ball Finish (6)	MSL Peak Temp (3)	Op Temp (°C)	Device Marking (4/5)	Samples
ADC104S101CIMM/NOPB	ACTIVE	VSSOP	DGS	10	1000	Green (RoHS & no Sb/Br)	CU SN	Level-1-260C-UNLIM	-40 to 85	X26C	Samples

(1) The marketing status values are defined as follows:
ACTIVE: Product device recommended for new designs.
LIFEBUY: TI has announced that the device will be discontinued, and a lifetime-buy period is in effect.
NRND: Not recommended for new designs. Device is in production to support existing customers, but TI does not recommend using this part in a new design.
PREVIEW: Device has been announced but is not in production. Samples may or may not be available.
OBSOLETE: TI has discontinued the production of the device.

(2) **RoHS:** TI defines "RoHS" to mean semiconductor products that are compliant with the current EU RoHS requirements for all 10 RoHS substances, including the requirement that RoHS substance do not exceed 0.1% by weight in homogeneous materials. Where designed to be soldered at high temperatures, "RoHS" products are suitable for use in specified lead-free processes. TI may reference these types of products as "Pb-Free".
RoHS Exempt: TI defines "RoHS Exempt" to mean products that contain lead but are compliant with EU RoHS pursuant to a specific EU RoHS exemption.
Green: TI defines "Green" to mean the content of Chlorine (Cl) and Bromine (Br) based flame retardants meet JS709B low halogen requirements of <=1000ppm threshold. Antimony trioxide based flame retardants must also meet the <=1000ppm threshold requirement.

(3) MSL, Peak Temp. - The Moisture Sensitivity Level rating according to the JEDEC industry standard classifications, and peak solder temperature.

(4) There may be additional marking, which relates to the logo, the lot trace code information, or the environmental category on the device.

(5) Multiple Device Markings will be inside parentheses. Only one Device Marking contained in parentheses and separated by a "~" will appear on a device. If a line is indented then it is a continuation of the previous line and the two combined represent the entire Device Marking for that device.

(6) Lead/Ball Finish - Orderable Devices may have multiple material finish options. Finish options are separated by a vertical ruled line. Lead/Ball Finish values may wrap to two lines if the finish value exceeds the maximum column width.

Important Information and Disclaimer: The information provided on this page represents TI's knowledge and belief as of the date that it is provided. TI bases its knowledge and belief on information provided by third parties, and makes no representation or warranty as to the accuracy of such information. Efforts are underway to better integrate information from third parties. TI has taken and continues to take reasonable steps to provide representative and accurate information but may not have conducted destructive testing or chemical analysis on incoming materials and chemicals. TI and TI suppliers consider certain information to be proprietary, and thus CAS numbers and other limited information may not be available for release.

In no event shall TI's liability arising out of such information exceed the total purchase price of the TI part(s) at issue in this document sold by TI to Customer on an annual basis.

TAPE AND REEL INFORMATION

REEL DIMENSIONS

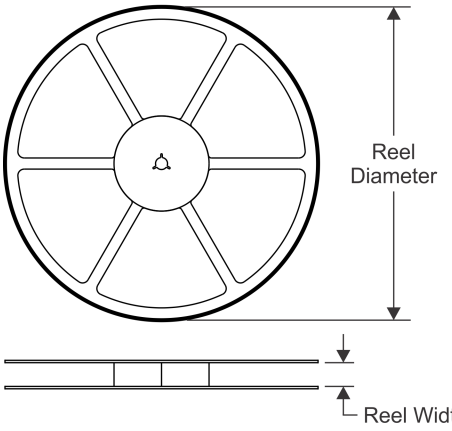

TAPE DIMENSIONS

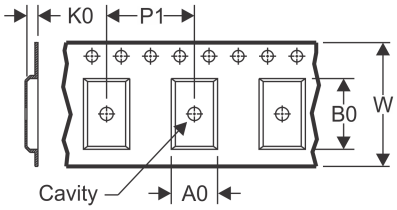

A0	Dimension designed to accommodate the component width
B0	Dimension designed to accommodate the component length
K0	Dimension designed to accommodate the component thickness
W	Overall width of the carrier tape
P1	Pitch between successive cavity centers

QUADRANT ASSIGNMENTS FOR PIN 1 ORIENTATION IN TAPE

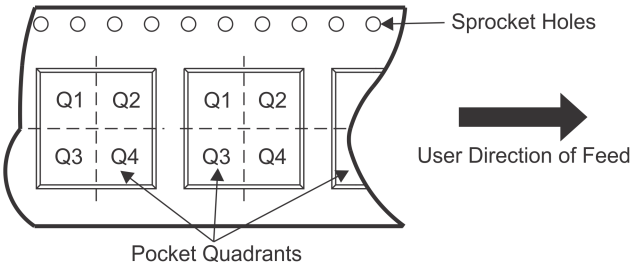

*All dimensions are nominal

Device	Package Type	Package Drawing	Pins	SPQ	Reel Diameter (mm)	Reel Width W1 (mm)	A0 (mm)	B0 (mm)	K0 (mm)	P1 (mm)	W (mm)	Pin1 Quadrant
ADC104S101CIMM/NOPB	VSSOP	DGS	10	1000	178.0	12.4	5.3	3.4	1.4	8.0	12.0	Q1

TAPE AND REEL BOX DIMENSIONS

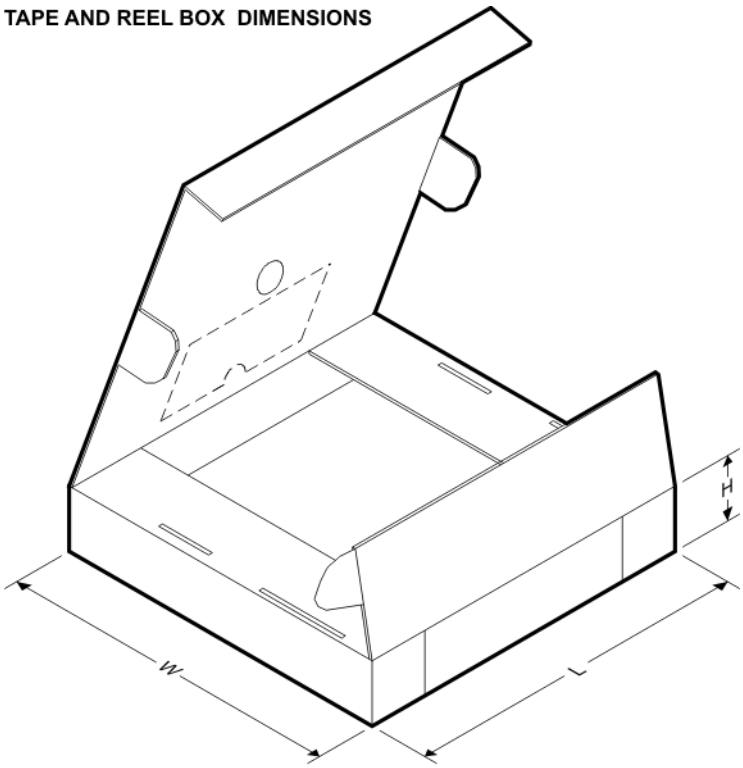

*All dimensions are nominal

Device	Package Type	Package Drawing	Pins	SPQ	Length (mm)	Width (mm)	Height (mm)
ADC104S101CIMM/NOPB	VSSOP	DGS	10	1000	210.0	185.0	35.0

DGS (S–PDSO–G10) PLASTIC SMALL–OUTLINE PACKAGE

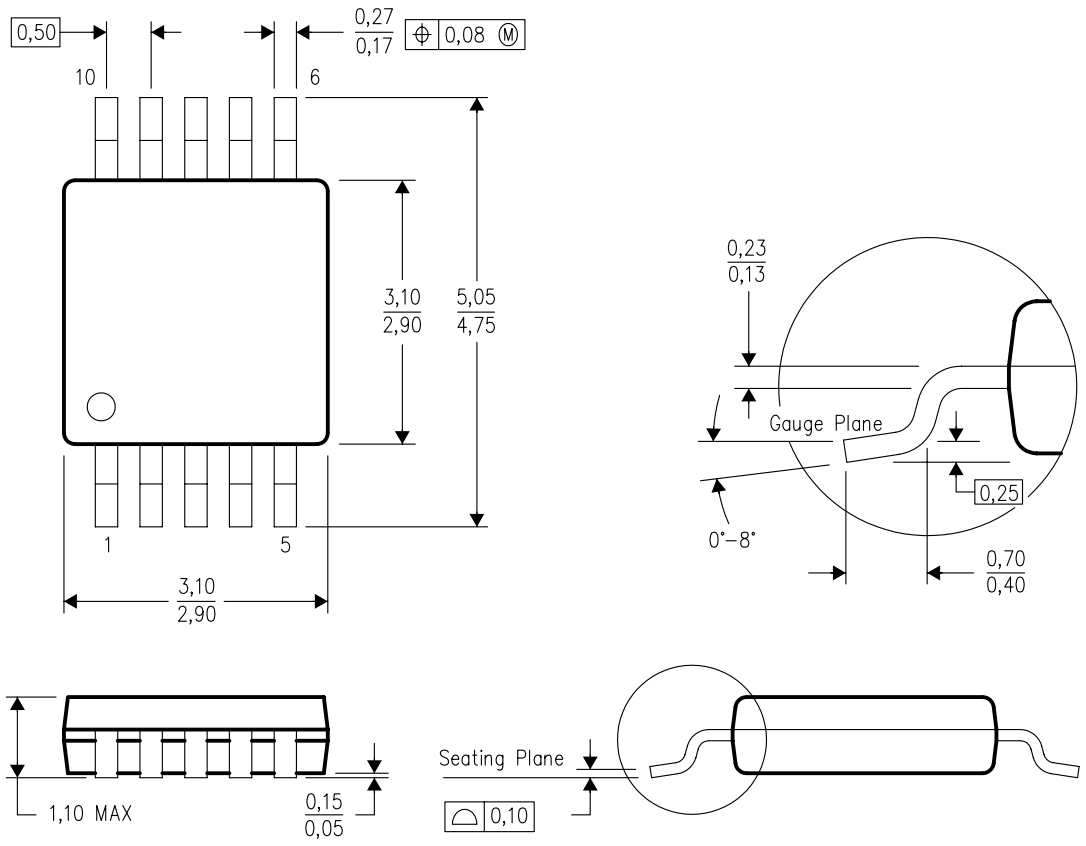

4073272/C 02/04

NOTES:
A. All linear dimensions are in millimeters.
B. This drawing is subject to change without notice.
C. Body dimensions do not include mold flash or protrusion.
D. Falls within JEDEC MO–187 variation BA.

IMPORTANT NOTICE

Texas Instruments Incorporated (TI) reserves the right to make corrections, enhancements, improvements and other changes to its semiconductor products and services per JESD46, latest issue, and to discontinue any product or service per JESD48, latest issue. Buyers should obtain the latest relevant information before placing orders and should verify that such information is current and complete.

TI's published terms of sale for semiconductor products (http://www.ti.com/sc/docs/stdterms.htm) apply to the sale of packaged integrated circuit products that TI has qualified and released to market. Additional terms may apply to the use or sale of other types of TI products and services.

Reproduction of significant portions of TI information in TI data sheets is permissible only if reproduction is without alteration and is accompanied by all associated warranties, conditions, limitations, and notices. TI is not responsible or liable for such reproduced documentation. Information of third parties may be subject to additional restrictions. Resale of TI products or services with statements different from or beyond the parameters stated by TI for that product or service voids all express and any implied warranties for the associated TI product or service and is an unfair and deceptive business practice. TI is not responsible or liable for any such statements.

Buyers and others who are developing systems that incorporate TI products (collectively, "Designers") understand and agree that Designers remain responsible for using their independent analysis, evaluation and judgment in designing their applications and that Designers have full and exclusive responsibility to assure the safety of Designers' applications and compliance of their applications (and of all TI products used in or for Designers' applications) with all applicable regulations, laws and other applicable requirements. Designer represents that, with respect to their applications, Designer has all the necessary expertise to create and implement safeguards that (1) anticipate dangerous consequences of failures, (2) monitor failures and their consequences, and (3) lessen the likelihood of failures that might cause harm and take appropriate actions. Designer agrees that prior to using or distributing any applications that include TI products, Designer will thoroughly test such applications and the functionality of such TI products as used in such applications.

TI's provision of technical, application or other design advice, quality characterization, reliability data or other services or information, including, but not limited to, reference designs and materials relating to evaluation modules, (collectively, "TI Resources") are intended to assist designers who are developing applications that incorporate TI products; by downloading, accessing or using TI Resources in any way, Designer (individually or, if Designer is acting on behalf of a company, Designer's company) agrees to use any particular TI Resource solely for this purpose and subject to the terms of this Notice.

TI's provision of TI Resources does not expand or otherwise alter TI's applicable published warranties or warranty disclaimers for TI products, and no additional obligations or liabilities arise from TI providing such TI Resources. TI reserves the right to make corrections, enhancements, improvements and other changes to its TI Resources. TI has not conducted any testing other than that specifically described in the published documentation for a particular TI Resource.

Designer is authorized to use, copy and modify any individual TI Resource only in connection with the development of applications that include the TI product(s) identified in such TI Resource. NO OTHER LICENSE, EXPRESS OR IMPLIED, BY ESTOPPEL OR OTHERWISE TO ANY OTHER TI INTELLECTUAL PROPERTY RIGHT, AND NO LICENSE TO ANY TECHNOLOGY OR INTELLECTUAL PROPERTY RIGHT OF TI OR ANY THIRD PARTY IS GRANTED HEREIN, including but not limited to any patent right, copyright, mask work right, or other intellectual property right relating to any combination, machine, or process in which TI products or services are used. Information regarding or referencing third-party products or services does not constitute a license to use such products or services, or a warranty or endorsement thereof. Use of TI Resources may require a license from a third party under the patents or other intellectual property of the third party, or a license from TI under the patents or other intellectual property of TI.

TI RESOURCES ARE PROVIDED "AS IS" AND WITH ALL FAULTS. TI DISCLAIMS ALL OTHER WARRANTIES OR REPRESENTATIONS, EXPRESS OR IMPLIED, REGARDING RESOURCES OR USE THEREOF, INCLUDING BUT NOT LIMITED TO ACCURACY OR COMPLETENESS, TITLE, ANY EPIDEMIC FAILURE WARRANTY AND ANY IMPLIED WARRANTIES OF MERCHANTABILITY, FITNESS FOR A PARTICULAR PURPOSE, AND NON-INFRINGEMENT OF ANY THIRD PARTY INTELLECTUAL PROPERTY RIGHTS. TI SHALL NOT BE LIABLE FOR AND SHALL NOT DEFEND OR INDEMNIFY DESIGNER AGAINST ANY CLAIM, INCLUDING BUT NOT LIMITED TO ANY INFRINGEMENT CLAIM THAT RELATES TO OR IS BASED ON ANY COMBINATION OF PRODUCTS EVEN IF DESCRIBED IN TI RESOURCES OR OTHERWISE. IN NO EVENT SHALL TI BE LIABLE FOR ANY ACTUAL, DIRECT, SPECIAL, COLLATERAL, INDIRECT, PUNITIVE, INCIDENTAL, CONSEQUENTIAL OR EXEMPLARY DAMAGES IN CONNECTION WITH OR ARISING OUT OF TI RESOURCES OR USE THEREOF, AND REGARDLESS OF WHETHER TI HAS BEEN ADVISED OF THE POSSIBILITY OF SUCH DAMAGES.

Unless TI has explicitly designated an individual product as meeting the requirements of a particular industry standard (e.g., ISO/TS 16949 and ISO 26262), TI is not responsible for any failure to meet such industry standard requirements.

Where TI specifically promotes products as facilitating functional safety or as compliant with industry functional safety standards, such products are intended to help enable customers to design and create their own applications that meet applicable functional safety standards and requirements. Using products in an application does not by itself establish any safety features in the application. Designers must ensure compliance with safety-related requirements and standards applicable to their applications. Designer may not use any TI products in life-critical medical equipment unless authorized officers of the parties have executed a special contract specifically governing such use. Life-critical medical equipment is medical equipment where failure of such equipment would cause serious bodily injury or death (e.g., life support, pacemakers, defibrillators, heart pumps, neurostimulators, and implantables). Such equipment includes, without limitation, all medical devices identified by the U.S. Food and Drug Administration as Class III devices and equivalent classifications outside the U.S.

TI may expressly designate certain products as completing a particular qualification (e.g., Q100, Military Grade, or Enhanced Product). Designers agree that it has the necessary expertise to select the product with the appropriate qualification designation for their applications and that proper product selection is at Designers' own risk. Designers are solely responsible for compliance with all legal and regulatory requirements in connection with such selection.

Designer will fully indemnify TI and its representatives against any damages, costs, losses, and/or liabilities arising out of Designer's non-compliance with the terms and provisions of this Notice.

Mailing Address: Texas Instruments, Post Office Box 655303, Dallas, Texas 75265
Copyright © 2017, Texas Instruments Incorporated